Date: Wednesday, 3/8/2006 10:38:19 AM
User: Kim Johnston

Process Sheet

Customer	: CU-DAR001 Dart Helicopters Services	**Drawing Name**	: DUCT
Job Number	: 26118		
Estimate Number	: 12316		
P.O. Number	: N/A	**Part Number**	: D34733
This Issue	: 3/8/2006 **S.O. No.** : N/A	**Drawing Number**	: D3473 REV A
Prsht Rev.	: NC	**Project Number**	: N/A
First Issue	: N/A **Type** : PURCHASED PARTS	**Drawing Revision**	: A
Previous Run	: N/A	**Material**	: N/A
Written By	: SEE COMMENT BELOW.	**Due Date**	: 3/31/2006 **Qty:** ~~6~~ 10 **Um:** Each
Checked & Approved By	: KJ 06.03.08		
Comment	: Est Rev:A New Issue 06-03-02 JLM		

Additional Product

Job Number:

Seq. #:	**Machine Or Operation:**	**Description :**
1.0	PG	PURCHASING

Comment: Issue P/O: 00000768 AB 06/03/09
E-mail or Ship DXF file to vendor
Laser cut flat pattern as per Dwg D3473
Possible supplier: Ind. Laser
Material realease note is required.

2.0	D34733F	COVER FLAT PATTERN

Comment: Qty.: 1.0000 sf(s)/Unit Total : ~~6~~ 10.0000 sf(s)
FLANGE PLATE

3.0	PACKAGING 1	PACKAGING RESOURCE #1

Comment: PACKAGING RESOURCE #1
Receive & Inspect For Transit Damage
Ensure material certification is attached AB 06.03.22

4.0	QC6	DIMENSIONAL CHECK

Comment: DIMENSIONAL CHECK AB 06.03.22

5.0	SMALL FAB 1	SMALL & MEDIUM FAB RESOURCE 1

Comment: SMALL & MEDIUM FAB RESOURCE 1 AB 06.03.21 (9)

1-Deburr if necessary.

2-Form as per Dwg D3473 using DT8860

PTO

Form: rprocess

Dart Aerospace Ltd

W/O:	WORK ORDER CHANGES						
DATE	STEP	PROCEDURE CHANGE	By	Date	Qty	Approval Chief Eng / Prod Mgr	Approval QC Inspector
		One taken for template	[signature]	060327	1	[signature] 060327	[signature] 0603-27

Part No: ____________ PAR #: ______ Fault Category: ____________ NCR: Yes (No) DQA: [initials] Date: 06/04/25

QA: N/C Closed: _____ Date: ________

NCR:	WORK ORDER NON-CONFORMANCE (NCR)							
DATE	STEP	Description of NC Section A	Corrective Action Section B			Verification Section C	Approval Chief Eng	Approval QC Inspector
			Initial Chief Eng	Action Description Chief Eng	Sign & Date			

NOTE: Date & initial all entries

Date: Wednesday, 3/8/2006 10:38:19 AM
User: Kim Johnston

Process Sheet

Customer: CU-DAR001 Dart Helicopters Services **Drawing Name:** DUCT

Job Number: 26118 **Part Number:** D34733

Job Number:

Seq. #:	**Machine Or Operation:**	**Description :**
6.0	QC5	INSPECT WORK TO CURRENT STEP

Comment: INSPECT WORK TO CURRENT STEP SB 06/04/24 (9)

7.0	PACKAGING 1	PACKAGING RESOURCE #1

Comment: PACKAGING RESOURCE #1
Identify and Stock
Location: GA

SB 06/04/24 9

Job Completion

Level 21 inspection DJ 06/04/24 (9)
U 06.04.25

Form: rprocess

Dart Aerospace Ltd

W/O:		WORK ORDER CHANGES					
DATE	STEP	PROCEDURE CHANGE	By	Date	Qty	Approval Chief Eng / Prod Mgr	Approval QC Inspector

Part No: ____________ PAR #: _______ Fault Category: ____________ NCR: Yes No DQA: _____ Date: _________

QA: N/C Closed: _____ Date: _________

NCR:		WORK ORDER NON-CONFORMANCE (NCR)						
DATE	STEP	Description of NC Section A	Corrective Action Section B			Verification Section C	Approval Chief Eng	Approval QC Inspector
			Initial Chief Eng	Action Description Chief Eng	Sign & Date			

NOTE: Date & initial all entries

PRELIMINARY ISSUE

DESIGN	DRAWN BY	**DART AEROSPACE LTD** HAWKESBURY, ONTARIO, CANADA
CHECKED	APPROVED	DRAWING NO. D3473 — REV. A — SHEET 4 OF 7
DATE 06.02.07		TITLE BLOWER INLET ADAPTER — SCALE 1:2

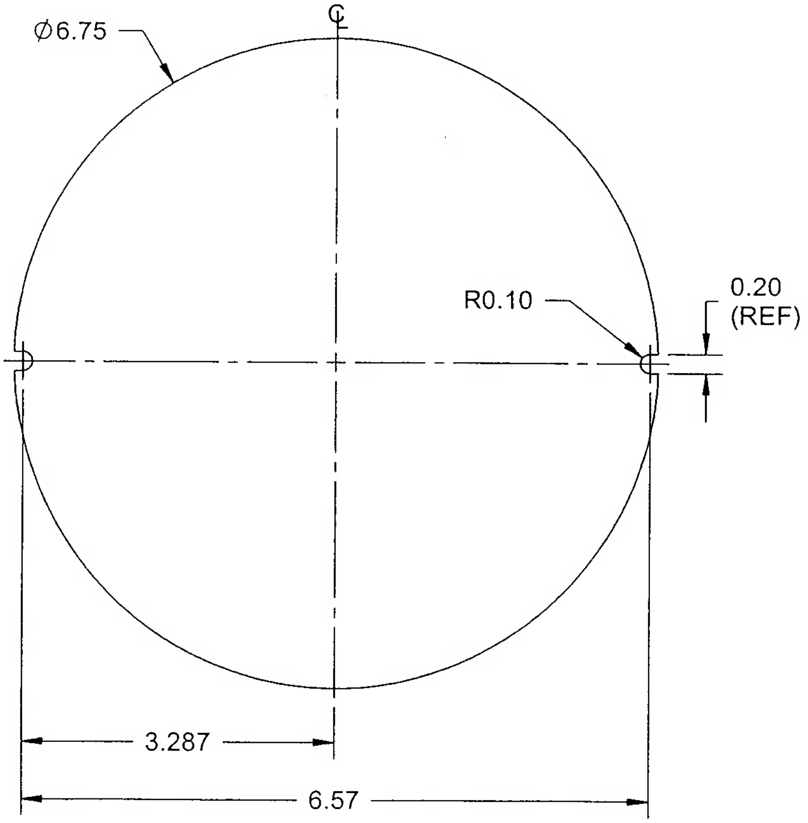

D3473-3F COVER FLAT PATTERN

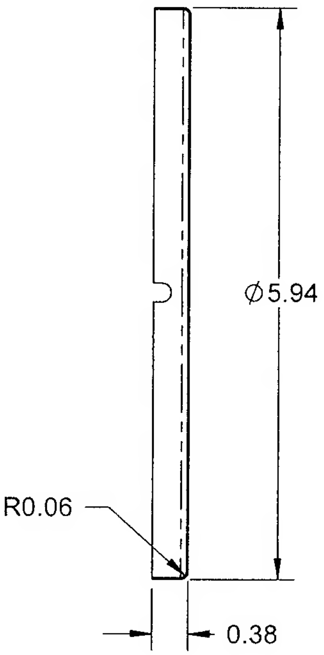

D3473-3F COVER

NOTES:

1) MATERIAL: AISI 304/316 SS SHEET PER MIL-S-5019 (ANNEALED) 2B FINISH
   26 GAUGE SS (0.018 THICK)
2) FINISH: NONE
3) TOLERANCES ARE PER DART QSI 018 UNLESS OTHERWISE NOTED
4) ALL DIMENSIONS ARE IN INCHES
5) BREAK ALL SHARP EDGES 0.005 TO 0.010

COPYRIGHT © 2006 BY DART AEROSPACE LTD.
THIS DOCUMENT IS PRIVATE AND CONFIDENTIAL AND IS SUPPLIED ON THE EXPRESS CONDITION THAT IT IS NOT TO BE USED FOR ANY PURPOSE OR COPIED OR COMMUNICATED TO ANY OTHER PERSON WITHOUT WRITTEN PERMISSION FROM DART AEROSPACE LTD.

3/17/06.

604-946-4153. ATTN; PETE

03/17/2006 14:36 FAX 604 946 4153 INDUSTRIAL LASER CUTTING ☑002
03/17/2006 14:18 FAX 6042729137 INTEGRIS METALS ☑001/004
3/17/2006 1:57 PAGE 001/002 Fax Server
T-726 P.007/015 F-587
Ryerson MAY-17-2005 10:05 FROM-INTEGRIS 253-288-9898

AK Steel

AK Steel Corporation

Metallurgical Test Report
Coshocton Works
Coshocton, OH 43812

Page 1

Load No. 7410672
SBN No. 7410672

CUSTOMER:
INTEGRIS METALS
PO BOX 340
MINNEAPOLIS, MN 55440

SHIP TO:
INTEGRIS METALS
306 "B" STREET
AUBURN, WA 98001

MILL ORDER NO.	PROCESSOR ORDER NO.	BUYERS ORDER NO.
772185-0191	427136-01	427136-01

PART NO.
74251497

ENGLISH UNITS -PRODUCT:- METRIC UNITS
.0178 NOM 48.0000 X COIL

SKID ID	PIECE	HEAT	PARENT COIL ID	NET WEIGHT
SKD713143	1	7280151	0540919-01	8,845 LBS. 4,012 KG.
SKD713144	1	7280151	0540919-01	8,870 LBS. 4,023 KG.
SKD713145	1	7280151	0540919-01	8,925 LBS. 4,048 KG.
SKD713149	1	7280151	0540919-02	8,800 LBS. 3,992 KG.
TOTAL SKIDS	TOTAL PIECES			TOTAL NET WEIGHT
4	4			35,440 LBS. 16,075 KG.

L=Ladle Analysis of Heat P=Product Analysis of Parent Coil **CHEMICAL ANALYSIS**

ID	C	MN	P	S	SI	CR	NI	MO	N	CU	CO
L 7280151	.049	1.39	.027	.001	.35	18.18	8.05	.35	.04	.30	.12

SHIPPING DATE: 09/13/2005

REMARKS: NO INTENTIONAL ADDITIONS OF MERCURY OR MERCURY COMPOUNDS, RADIUM, ALPHA SOURCE, AND LOW MELTING ALLOYS OR ELEMENTS CAPABLE OF FORMING LOW MELTING ALLOYS WERE MADE THROUGHOUT THE PROCESSING OF THIS MATERIAL.

PRODUCT DESCRIPTION

CR SHT TYPE 304 STAINLESS #2B FINISH SLIT EDGE * AMS 5513 E ALL TECH REQS HAVE BEEN MET UNLESS AGREED TO OR NOTED OTHERWISE * ASTM A 240 -04 EX PARA 3.1.9 ELONG WILL BE DETERMINED BY ASTM E 8 * ASTM A 480 -01 EX PARA 10.1.1 ELONG WILL BE DETERMINED BY ASTM E 8 EX PARA 26.1.1.3 COIL WILL BE TAGGED ON OUTSIDE ONLY * ASTM A 666 -03 * IN-001 Rev 0, * IN-011 0 * BUYER PART# 74251497 * ASME SA-240 SECTION II PART A (2001 ED. 2002 ADDENDA) EX PARA 3.1.9 ELONG WILL BE DETERMINED BY ASTM E 8 * EN-10204 3.1.B

PARENT COIL ID	POS (F/T)	DIR (L, T, D)	COND	% ELONG 2 INCH MEASURED	TENSILE STRENGTH (KSI)	Y.S. .2% OFFSET (KSI)	ROCKWELL HARDNESS Tail	ROCKWELL HARDNESS Front		
[illegible]	T	T	[illegible]	[illegible]	[illegible]	[illegible]	B 72	B 74		

*** CONTINUED ON NEXT PAGE ***

AK Steel

AK Steel Corporation
Metallurgical Test Report
Coshocton Works
Coshocton, OH 43812

Page 2

Load No. 7410672
SRN No. 7410672

CUSTOMER
INTEGRIS METALS
PO BOX 360
MINNEAPOLIS, MN 55440

SHIP TO
INTEGRIS METALS
306 "B" STREET
AUBURN, WA 98001

MILL ORDER NO.	PROCESSOR ORDER NO.	BUYERS ORDER NO.
272318-0191	427136-01	427136-01

PART NO.
74251097

ENGLISH UNITS -PRODUCT:- METRIC UNITS
.0175 NOM 48.0000 X COIL

PARENT COIL ID	POS (F/T)	DIR (L, T, D)	COND	ASTM A 262 PRACTICE E	BEND 180 1T					
0549919-02	T		A.S.T.M	PASS	PASS					

PARENT COIL ID	POS (F/T)	DIR (L, T, D)	COND	%ELONG 2 INCH MEASURED	TENSILE STRENGTH - (KSI)	Y.S. .2% OFFSET (KSI)	ROCKWELL HARDNESS Tail	ROCKWELL HARDNESS Front		
0549919-02	F	T	A.S.T.M	71.0	92.8	33.1	B 72	B 74		

PARENT COIL ID	POS (F/T)	DIR (L, T, D)	COND	BEND 180 1T						
0549919-02	F		A.S.T.M	PASS						

THE CHEMICAL ANALYSIS AND PHYSICAL OR MECHANICAL TESTS REPORTED ABOVE ARE CORRECT AS CONTAINED IN THE RECORDS OF THE CORPORATION.

ALL TESTING IS DONE IN ACCORDANCE WITH ASTM STANDARDS UNLESS OTHERWISE NOTED.

AK Steel Corporation MMQC[illegible] 5/03

"THIS CERTIFIED TEST REPORT HAS BEEN DELIVERED TO A CONSIGNEE OF MATERIAL PURCHASED FROM AK Steel Corporation. TO AVOID THE POSSIBILITY OF ITS MISUSE ON DELIVERY OF THE REPORT TO A THIRD PARTY IT MUST BE RECERTIFIED BY AND UNDER THE NAME OF SUCH CONSIGNEE"

SIGNED [signature] DATE 05/[illegible]/2005 TIME 19:[illegible] PM
APPLICATION ENGINEER

MATERIAL TEST REPORT

From: NORTH AMERICAN STAINLESS CANADA, IN
740 IMPERIAL ROAD NORTH

Page : 1
Heat/Lot : 86K8
TIN : B42748

Sold To: INTEGRIS METALS, LTD.
7910 4)TH STREET SE
CALGAR(, AB T2C2Y3

Ship To: ***CUSTOMER PICKUP***
4375 14TH STREET NORTHEAST
CALGARY
ABT3E7A9

Vendor Information

Cust PO #: 4)6824 Cust PO DT: 11/03/05

Specifications

STAINLESS STEEL SHEET, COLD ROLLED, ANNEALED AND PICKLED.
ASTMA240/04a 480/04a,666/03,ASMESA240/04-A05,480/04-A05,SA666/04
QQS766D-A X IG PRM,AMS5513H X MRK&FIN,MIL5059D,AMD3,X CRWN MEAS
CORROSION: ASTM A262/02aE;180Bend-OK
Buyer Part: ''4288441
304 2B .1305 IN 48 IN 96 IN
Country of Origin: UNITED STATES

Mechanical Tests

		UOM	L	O	UOM	L	O
Yield Strength - 0.2% Offset	40	KSI	F	TRANSV			
Tensile Strength (UTS)	93.3	KSI	F	TRANSV			
Rockwell B	85		F	TRANSV			
Pct Uniform Elong 2 In/50mm	57.01	PCT	F	TRANSV			
Rockwell A	85		T	TRANSV			

Chemical Composition

C	Carbon-Pct	.059	CR	Chromium-Pct	18.360
CU	Copper-Pct	.342	MN	Manganese-Pct	1.643
MO	Molybdenum-Pct	.285	N	Nitrogen-Pct	.037
NI	Nickel-Pct	8.150	P	Phosphorus-Pct	.029
SI	Silicon-Pct	.289			

Comments

MATERIAL TEST REPORT

From: NORTH AMERICAN STAINLESS CANADA, IN
740 IMPERIAL ROAD NORTH

Page : 2
Heat/Lot : 86K8
TIN : B42748

Material free from mercury contamination. No weld repairs.
EN 10204 3.1 PED 97/23/EC Annex1, Para. 4.3 QQ8763F Cond A
This document certifies the material has been tested in
accordance w. thapplicable specifications described herein
and has met those requirements.

QA by ERIC HESS 02/01/2006

Miscellaneous Data

GUELPH , ONN: K1Z3
Control #: 9!C60214
Part #: 74271441
.135 X 48 X 96

Date: 03/17/06

SOLD TO: IND. LASER
PO 110880
S/O 90-374786-02
[signature] 3/17/06

The Chemical Analysis and Mechanical Test
data was received via EDI from the above
mentioned vendor.

INTEGRIS METALS, LTD.